Thermal + Night Vision Fusion scope

AIM 101

Catalogue

Project	Content	Page
	Cover	1
	Catalogue	2
	Revision History	2
1	Product Overview	3
2	Product Features	3
3	Product Parameters	4-5
4	Product Illustration	5-6
5	Product Usage	7-8
6	Menu Interface	9-13
7	Operation Instruction	13-15
8	Precautions	15-16
9	Package and Accessories	16

Revisions History

Versions	Revisions History	Comment
1.0	First Edition	2023.11.20
1.1	Revised Edition	2025.04.07
1.2	Revised Edition	2025.07.15
1.3	Revised Edition	2026.04.09

1. Product Overview

Step into the future of precision with the Shinenyx AIM101 Fusion Rifle Scope—a masterful fusion of digital night vision and thermal imaging that puts ultimate power in your hands. With a brilliant immersive display and high-definition crystal clear image, every detail comes alive, whether you're hunting in total darkness or zeroing in on distant targets. Its exclusive Fused Image Technology (F.I.T.) allows you to switch effortlessly between night vision and thermal modes, or merge them into one seamless, high-definition image for unparalleled situational awareness. The built-in laser rangefinder, accurate up to 1,200 yards, paired with cutting-edge ballistic drop compensation technology, guarantees dead-on accuracy every time. Engineered to thrive in the most demanding conditions, this scope is as tough as it is smart—ruggedly tested and equipped with GPS, video recording, and an intuitive interface. Whether you're tracking heat signatures 800 yards away or recording your perfect shot, the AIM101 is your elite, all-day, all-night advantage. Dominate the field like never before.

2. Product Features

- RTO - Rapid Target Outline Technology
- FIT - Fused Image Technology
- LRF - Laser range finder
- 1x, 2x, 4x digital zoom capability
- Integrated IR light
- Internal photo and video recording capabilities
- Superior optics and digital processors

3. Product Parameters

AIM101				
Dual-camera		Night Vision	Thermal	Fusion
Image Sensor	Resolution	1920×1080	640×512	1920×1080
	Detector Size	1/1.8 inch	0.6 inch	/
	Imaging Mode	Black&White	White Hot	Colorful Fusion / Colorful Negative Fusion
	Recognition Enhancement	RTO (Outline Heat Target)		
	Frame Rate	25Hz		
Objective Lens	Focal Length	48mm	35mm	/
	Field of View	9°x5°	9°x5.6°	9°x5°
	Focus Method	Manual Rotation		
Viewfinder		2.1inch, 1600×1200 LCD Screen		
Detection Performance	Detection Range Hog Target	Up to 800 yards		
	Recognition Range Hog Target	Up to 500 yards		
Video Recording	Built In Storage	128G (about 15h)		
	Resolution	1920*1200@25fps		
Range Finder	Ranging Range	Up to 1200 yards		
Other Features	Electronic Compass	Indicates Direction and Angle of Pitch		
	Positioning	Switchable GPS		
Interface	USB-C	USB-C (Video&Photo Copy/Power Supply/ Battery Charge/ Firmware Update/Live Video Output)		
Operational Characteristics	Magnification	5.2x/10.4x/20.8x		

	Power Supply	2x 18650 Batteries/USB-C Interface
	Battery Life	Up to 8 hours
	Operating Temperature	-20°F~+110°F
	Ingress Protection	IPX5
	Weight	2 pounds 2 ounces (With Batteries)
	Dimension	With Eyepiece Cover: 282x87x78mm (Turn Off The Fill Light)
	Recoil Resistance	Maintain Zero After 7.62 x 51 NATO 1000 Shoots

4. Product Illustration

USB
AIM101

5. Product Usage

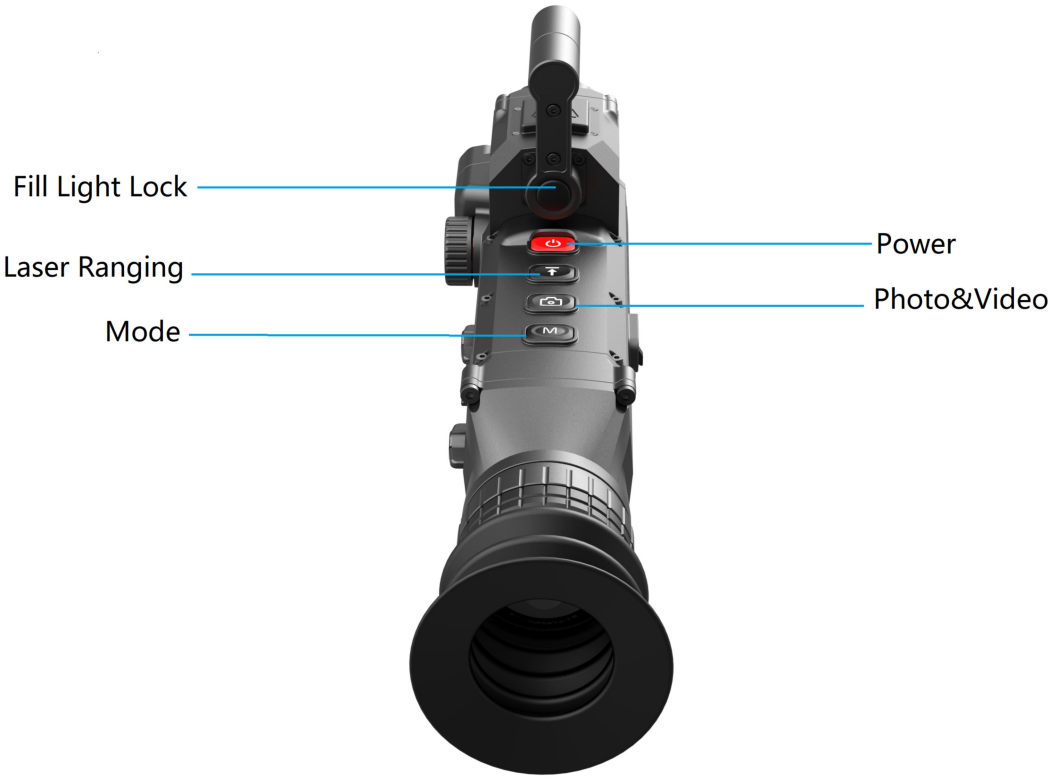

(1) Push down the battery compartment lock and the battery compartment will pop out automatically.

(2) Install the batteries first.

(3) Press and hold the <Power> button for 3 seconds to turn on the device. The target can be viewed through the eyepiece. (To turn off, press and hold the <Power> button again for 3 seconds)

(4) Rotate the eyepiece to adjust the view until the cursor on the screen is absolutely clear.

(5) In night vision and thermal imaging modes, rotate the corresponding objective lens until the object is absolutely clear and the focus is completed. For fusion mode, focus must be done in low light and thermal imaging modes first.

(6) Rotate the side knob (in menu-off mode) to adjust the digital magnification (1.0X, 2.0X, 4X).

(7) Short press the <Mode> button, the working modes will cycle in the following order: Fusion2, Thermal Imaging, Low Light and Fusion1 modes.

(8) Short press the <Photo & Video> button to turn on the photo taking function; long press the <Photo & Video> button to turn on the video recording function, and long press again to turn off the video recording function.

(9) Short press the <Menu> knob, and the <Menu> icon will appear on the screen. Rotate the <Menu> knob to select the function, and then short press the <Menu> knob to confirm.

(10) Press and hold the round rotaiton button(at the bottom part of the fill light), and rotate the fill light to the working position (vertical state), and then the fill light will be turned on automatically.

6. Menu Interface

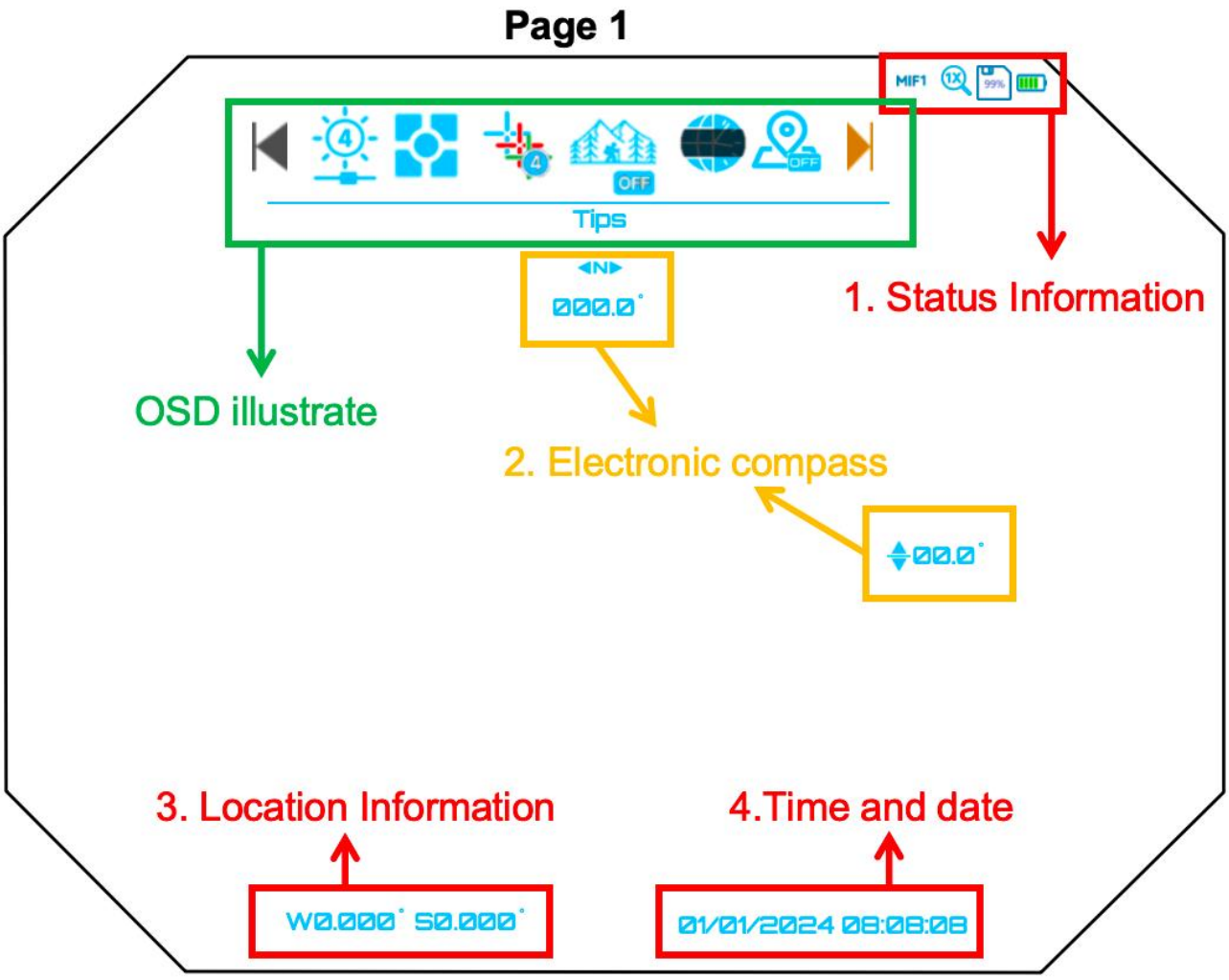

- **Status Information: (As Shown Above)**

1. Status Information:

   Mode; Magnification; Remaining Memory Capacity; Remaining Battery Life

2. Electronic compass:

   Azimuth and pitch angle

3. Location Information:

   Latitude and longitude information

4. Time and date

- **OSD illustrate:**

  In page 1 the status bar is located at the upper part of the display screen, displaying the actual operation status information of the sight, from left to right:

  (1) Display Brightness

(2) Metering Mode

(3) Cross Hair

(4) Highlight Object

(5) Timezone

(6) GPS State

Page 2

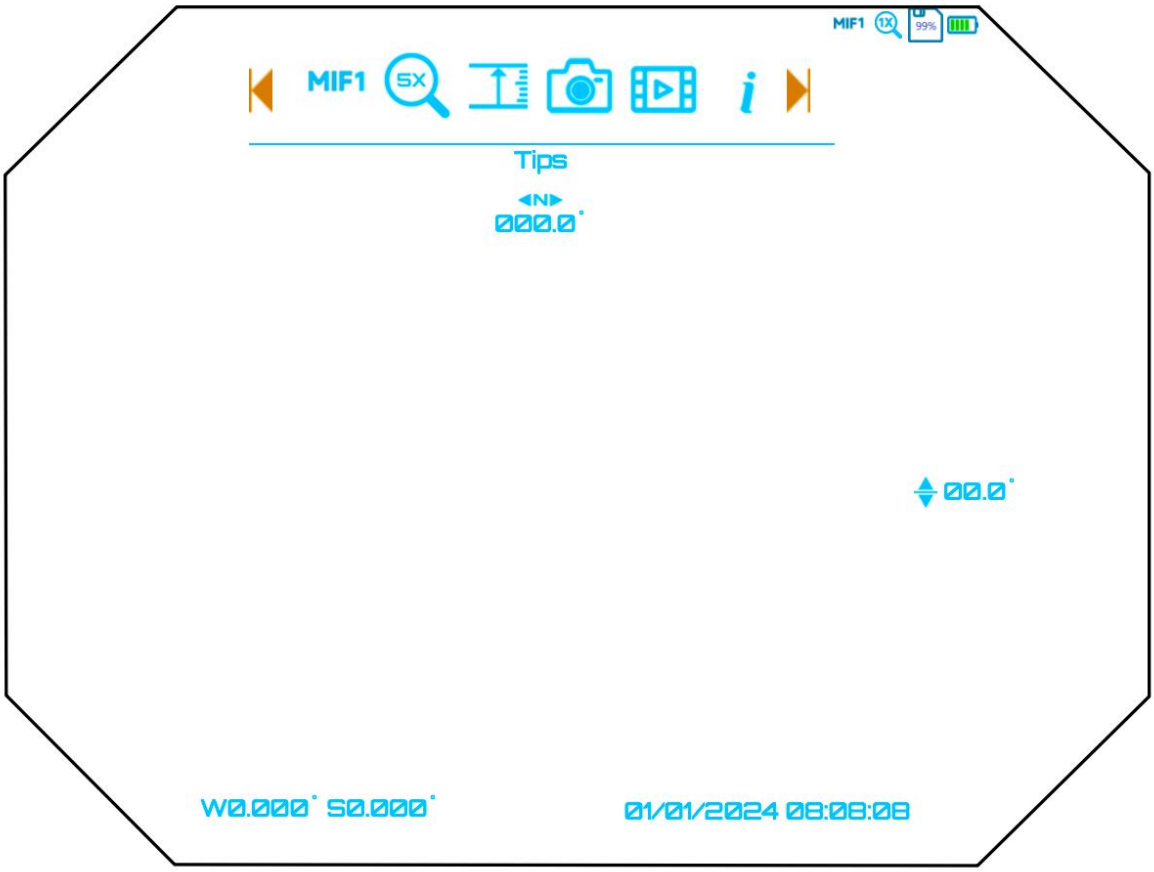

In page 2 the status bar is located in the upper portion of the screen, displays information about the actual operation state of the sight, from left to right in turn as follows:

(1) Display Mode

(2) Digital Zoom

(3) Laser Ranging

(4) Snapshot

(5) Video Recorder

(6) About: model / version

Page 3

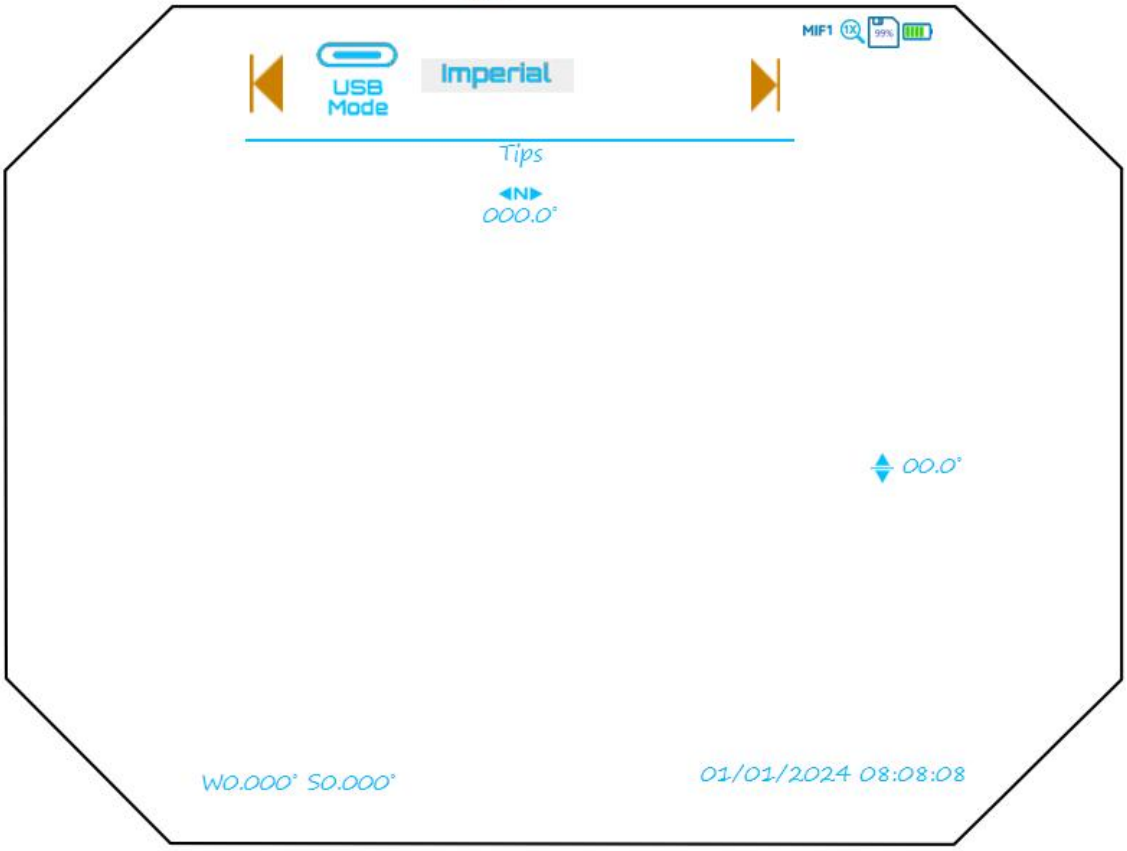

In page 3 the status bar is located in the upper portion of the screen, displays information about the actual operation state of the sight, from left to right in turn as follows:

(1) USB Mode Selection: storage/Live video

(2) Unit: imperial / metric

Page 4

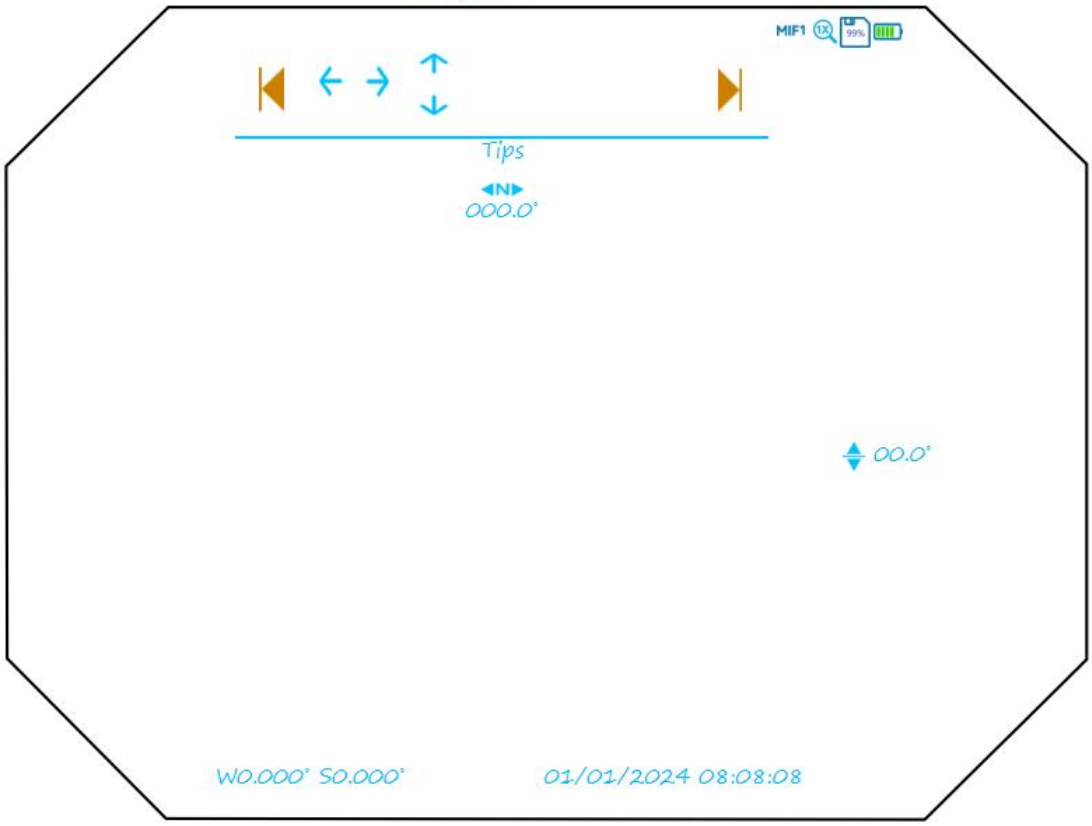

In page 4 the status bar is located in the upper portion of the screen, displays information about the actual operation state of the sight, from left to right in turn as follows:

(1) Cross hair Horizontal Position Adjust

(2) Cross hair Vertical Position Adjust

Page 5

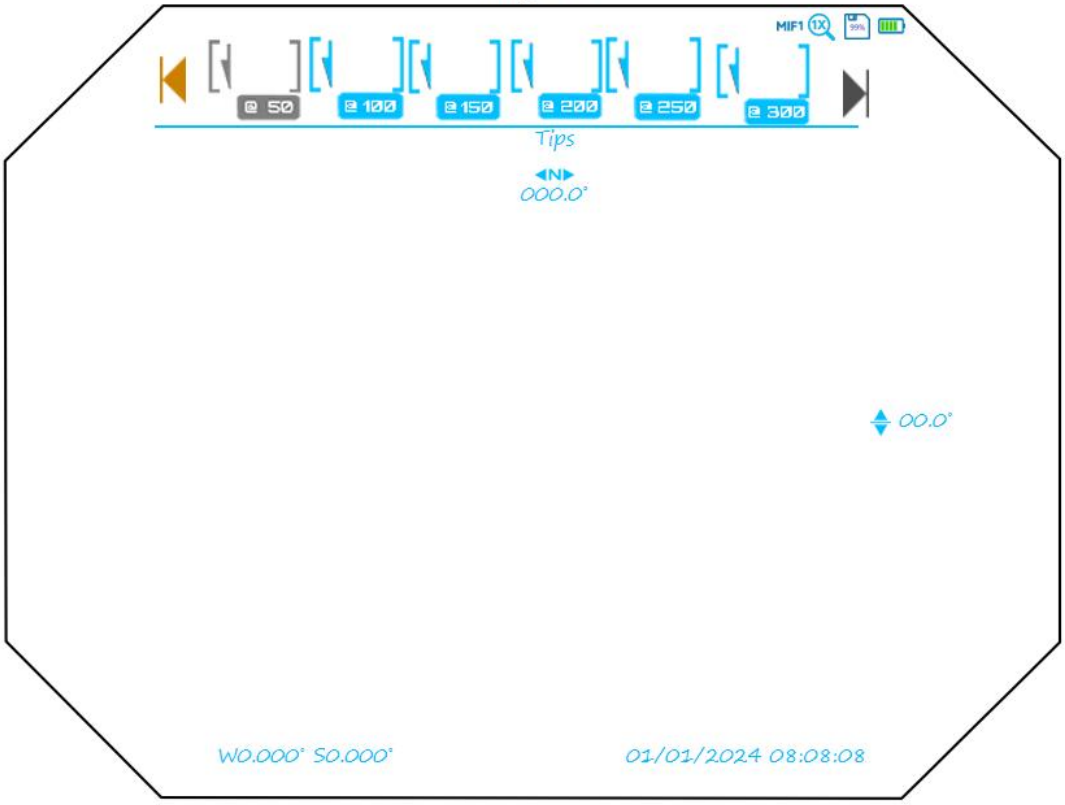

In page 5 the status bar is located in the upper portion of the screen, displays information about the actual operation state of the sight, from left to right in turn as follows:

(1) Zero distance in 50 yards

(2) Hit point adjusting in 100 yards

(3) Hit point adjusting in 150 yards

(4) Hit point adjusting in 200 yards

(5) Hit point adjusting in 250 yards

(6) Hit point adjusting in 300 yards

7. Operation Instruction

Default instructions:

- Press the <Menu> knob to access the main menu
- Rotate the <Menu> wheel to select the menu item
- Press the <Menu> knob to confirm the selection
- Rotate to select the required gear, short press to determine

Item	Icon	Description	Number of Gears	Illustration
1		Display brightness	6	**Brightness control** • Brightness Levels: 1 to 6 (Level 6 being the brightest) • Default : 4
2		Metering Mode	2	**Metering Mode** • Average Metering Mode Default mode. Evaluate whole frame and make it to be at best exposure status. • Spot Metering Mode Only evaluate small part around cross hair ignore the rest of frame.
3		Cross Hair	4	**Cross Hair(Off ,Color)** • Cross hair can be hided or change color between 1-4. • Default: 1
4		Camera Mode	4	**Camera Mode** • 4 Modes: MIF1 MIF2 Night Vision, Thermal Imaging , MIF 1 Mode and MIF 2 Mode. • Use <Mode> button to switch the mode.
5		Digital Zoom	3*	**Digital Zomm (5X, 10X and 20X)** • Rotate left side knob to switch (when menu-off), or press the button as usual • Default: 5.0X
6		Photo	1	**Photo** • Tap the button to take the photo. • Use <Photo&Video> button, short press to shoot a photo.
7		Video Recording	2*	**Video Recording** • Tap the button to record a video. Tap again to stop recording. • Use photos & video button, long press to take videos; Long press again, stop video recording.

8		Laser Ranging	1	**Laser Ranging** • Tap the button to measure the distance,or use the <LR> button to measure the distance. • Target location should be displayed when the electronic compass is turned on.
9		Cross hair Horizontal Position Adjust	1999	**Cross hair Horizontal Position Adjust** • Default: 000
10		Cross hair Vertical Position Adjust	1999	**Cross hair Vertical Position Adjust** • Default: 000
11		RTO (Rapid Target Outline)	3	**Rapid Target Outline** OFF Off: No rapid target outline. ON On: Rapid target outline always on. BLINK Blink: On or off alternately

8. Precautions

- When the operating environment of the equipment changes from low temperature to high temperature, it is necessary to heat the equipment first. Otherwise,moisture may condense on the lens surface and affect its use.
- When the device is operated below -40 degrees, the battery must be placed in a warm place (such as a chest pocket) before turning it on.
- Accessories: Only use approved accessories and batteries. Do not use incompatible accessories.
- It is recommended to use high-quality 18650 batteries. Poor-quality batteries will affect

the performance and easily damage the equipment.

- Try to avoid rain or fog, and prevent falling, bumping, and collision.
- Do not wipe the lens frequently. If you need to wipe it, please use lens paper or lens cleaning cloth.
- To prevent battery leakage, the battery should be removed, when the device is not used for more than two weeks.
- To avoid moisture exposure to the lens, the device should be placed in a dry, ventilated place.
- In order to avoid injury to the human eyes or damage to the rangefinder, it is necessary to follow the operation instruction when using the rangefinder and IR falsh light.
- Only qualified maintenance personnel is allowed to install or repair this equipment.

9. Packaging and Accessories

- 1 x thermal+night vision fusion monocular
- 2 x 18650 rechargeable lithium batteries
- 1 x lens wipe
- 1 x USB cable